PILASTER CAPS

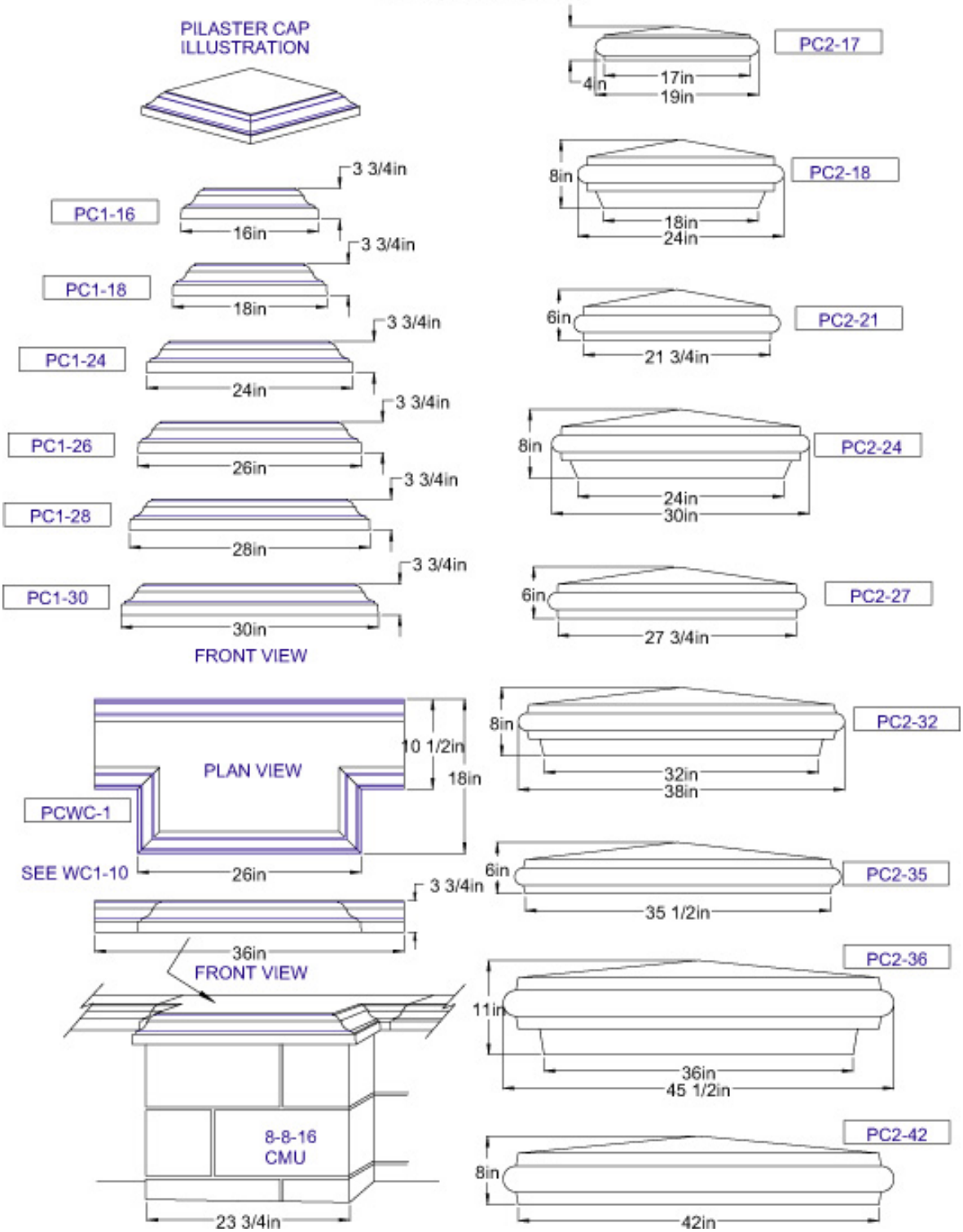

4 - 1